NOTE: ALL DIMENSIONS IN mm

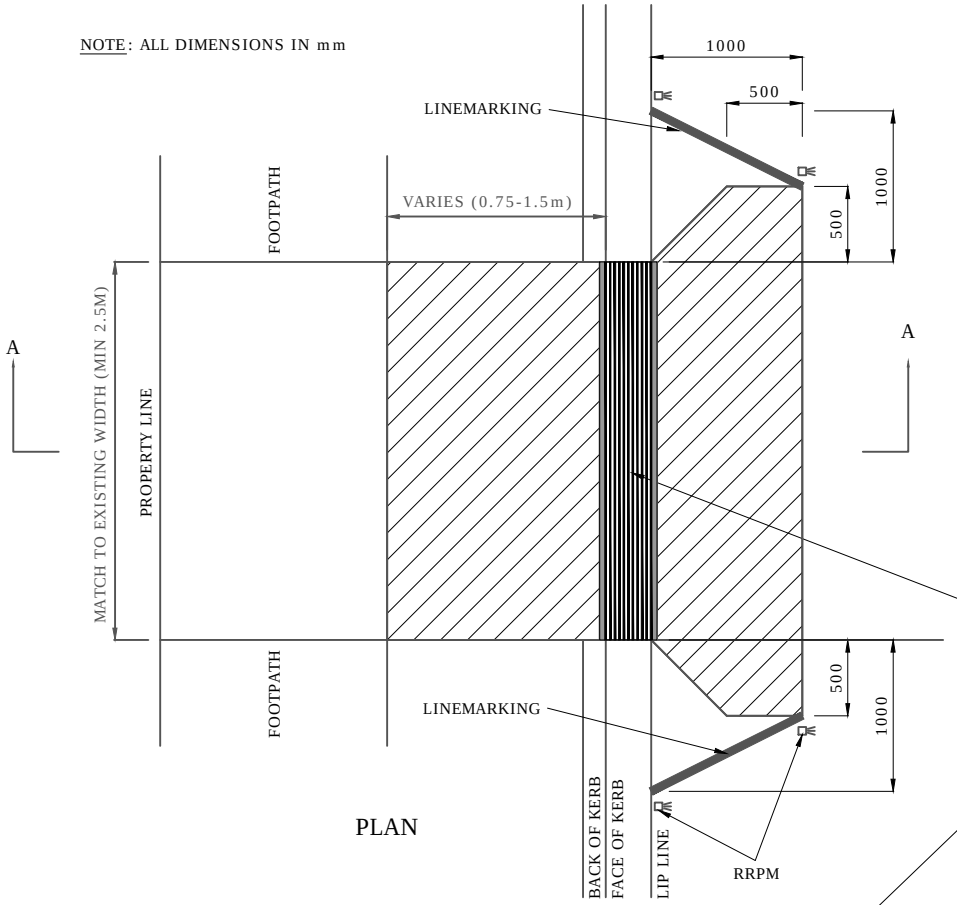

PLAN

TRENCH GRATE: USE R&S TG-H-CG-300L CLASS D GALVANISED LONGITUDINAL BAR TRENCH GRATE. MUST BE APPROVED BY COUNCIL SUPERINTENDENT;

NOTE: TOP OF TRENCH GRATE IS TO BE LEVEL WITH TOP OF KERB

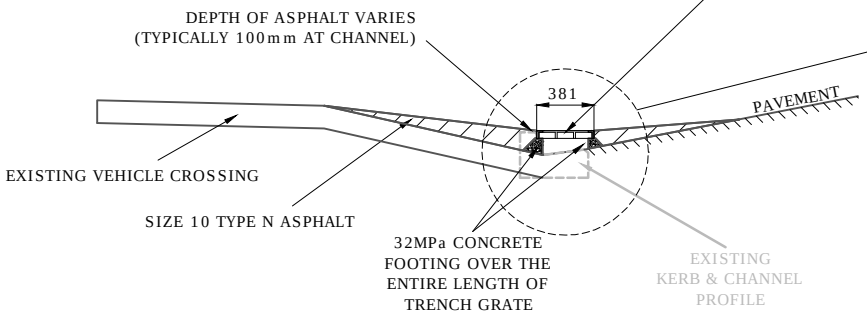

SECTION A-A

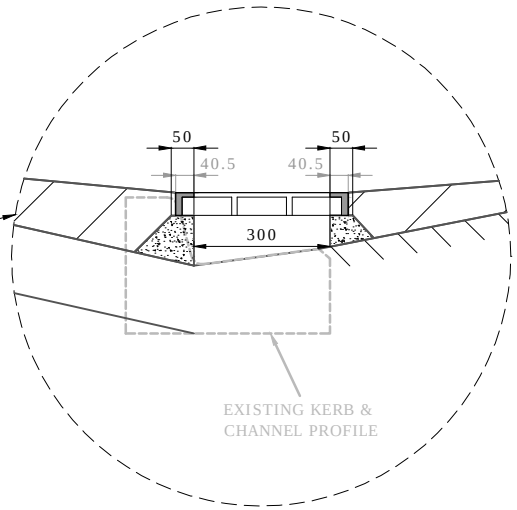

NOTES:

No.	Description:	Drawn:	Checked:	Date:
F				
E				
D	FINAL	MDH	AN	17/07/14
C	FINAL	NP	AN	16/10/13
B	FINAL	AG	AN	15/07/13
A	FINAL	NP	AN	21/06/12

REVISIONS:

DRAWN: NP
CHECKED: AN
AUTHORISED: AN

DATE PLOTTED: DATE PLOTTED
SCALE: 1:50

CITY OF PORT PHILLIP
INFRASTRUCTURE SERVICES

DRAWING TITLE:
STEEP VEHICLE CROSSING TREATMENT (RESIDENTIAL USE ONLY)

DRG. No. SD 4107
REVISION: D